Alpha and Beta High Resolution Dielectric, Conductivity, Impedance and Gain-Phase Analyzers

Technical Specification

Issue: 03/2021 Rev. 3.7 by Novocontrol Technologies GmbH & Co. KG

Novocontrol Technologies
GmbH & Co. KG
Aubachstr. 1
56410 Montabaur/Germany

Phone: +49 2602 919669 0
FAX: +49 2602 919669 33
Email: novo@novocontrol.de
WWW http://www.novocontrol.de

These specifications apply to Novocontrol Technologies Alpha and Beta series analyzers of Rev. C, indicated by XXX > 700 in the serial number scheme, e.g., 6.4_200_40_XXX_YY_14062017.

Table of Contents

1. Frequency response analyzer unit

Two voltage input channel digital frequency response analyzer with sine wave and dc bias generator

Voltage input channels 1 and 2	
Frequency range	3 µHz .. 40 MHz ac or dc coupled
Voltage ranges (rms):	32 V, 17 V, 10V, 5.6 V, 3.2 V, 1.7 V, 1 V, 560 mV, 320 mV, 170 mV, 100 mV, 56 mV, 32 mV
Amplitude and phase resolution and accuracy	cf "Measurement Ranges and Accuracy, Accuracy of Gain-Phase Measurement"
Input impedance	Resistance: 1 MΩ, Capacity < 20 pF
Measured parameters	Dc, ac base and higher harmonic components V1*, V2* of the both input channels at generator frequency, phase angle of (V1*, V2*)
Measurement rate:	Up to up to 600 impedance points per second via USB-GPIB[1] adapter BDS 1501 with mainframe option F (high speed). Up to 10.5 impedance or 19 gain-phase data points per second via GPIB port without option F.

1.1. Mainframe sine wave generator

The sine wave generator operates by direct digital synthesis (DDS).

1.1.1. Analyzer models

Analyzer Model	**Minimum frequency**	**Maximum Frequency**
Alpha-L, Beta-L	3 µHz	0.3 MHz
Alpha-K, Beta-K	3 µHz	3 MHz
Alpha-N, Beta-N	3 µHz	20 MHz
Alpha-T, Beta-T	3 µHz	40 MHz

1.1.2. Frequency resolution and accuracy

Frequency range	**Frequency resolution**
40 MHz to 20 MHz	23 mHz
20 MHz to 1.25 MHz	12 mHz
1.25 MHz to 78 kHz	0.73 mHz
78 kHz to 4.8 kHz	45 µHz
4.8 kHz to 3 µHz	3 µHz

[1]The value depends on the adapter type.

Absolute frequency accuracy	10^{-4} of selected frequency

1.1.3. Output voltages

Ac voltage amplitude	0 – 3 V (rms) below 10 MHz 0 – 2 V (rms) above 4 MHz for Beta 0 – 1 V (rms) above 10 MHz
Ac voltage resolution	0.7 mV from 3 V .. 100 mV 6 µV below 100 mV
Ac voltage accuracy	$\pm(10^{-2} + 10^{-2}/\text{MHz})$ of selected voltage ± 20 µV
Ac voltage distortion	$2\cdot10^{-3}$ of selected voltage below 100 kHz at 1V rms
Dc bias voltage range with	±40V (requires **Option B**)
Dc bias voltage resolution	1 mV
Dc bias voltage accuracy	± 10 mV
Dc bias current limit	about ±70 mA
Output impedance (ac and dc bias)	50 Ω

1.2. Current-to-voltage converter

Frequency range	3 µHz to 40 MHz
Current ranges (rms)	40 mA, 15 mA, 1.5 mA, 150 µA, 15 µA, 1.5 µA,150 nA, 15 nA, 1.5 nA, 150 pA, 15 pA, 1.5 pA
Current resolution (reproducibility)	± 5 fA $\pm10^{-5}$ of current range ±30 fA/Hz · frequency of measurement
Capacity range	10^{-15} F – 10 F
Impedance range	0.01 Ω – 2.10^{14} Ω (Alpha); 0.1 mΩ – 2.10^{14} Ω (Beta)
Inductance range	100 nH – 1 kH
Accuracy in tan(δ) for capacitive samples	$\pm 3\cdot10^{-5} \pm 10^{-3}$ of measured value for frequencies between 10 Hz and 100 kHz and sample capacity between 50 pF and 2 nF

For more detailed impedance measurement ranges and accuracy limits refer to the "Measurement Ranges and Accuracy, Accuracy of Impedance Measurement" chapter.

1.2.1. Reference capacitors

63 build in low loss precision reference capacitors from 25 pF .. 2 nF

1.2.2. Differential voltage inputs V1H, V1L (Beta only)

Common mode rejection	> 80 db below 100 kHz > 60 db below 1 MHz
Input bias current	$< 2 \cdot 10^{-12}$ A
Input impedance	$> 10^{-12}$ Ω in parallel < 10 pF

2. Measurement Ranges and Accuracy

2.1. Accuracy of Impedance Measurement

The specification below applies for

- Temperature between 15 °C and 25 °C, Relative Humidity < 40 %, Oscillator level 1 Vrms
- Reference measurement mode enabled
- Auto reference capacitor mode enabled
- Low impedance load short calibration enabled
- Low capacity open calibration enabled

Impedance measured at the Alpha or Beta BNC impedance inputs in two-wire mode.

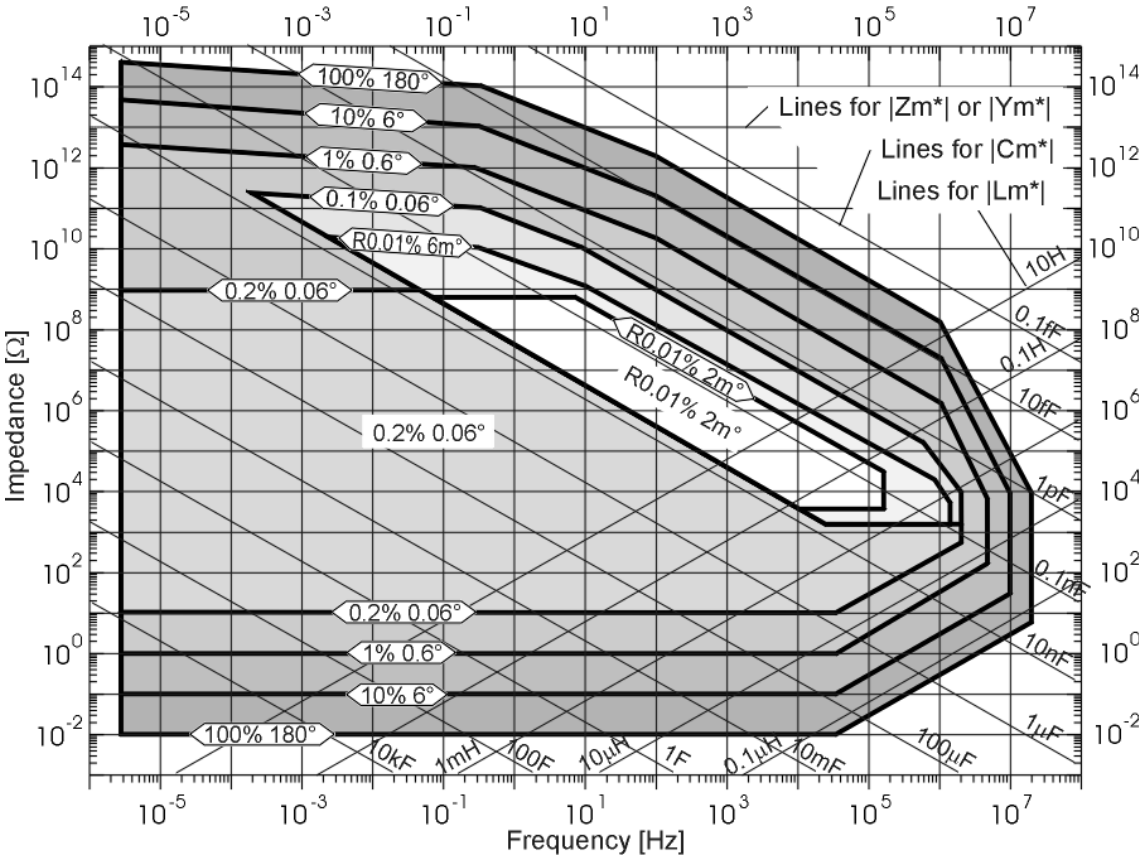

Fig. 1. Alpha and Beta (two-wire mode) impedance measurement accuracy specification

For impedance points in the areas between the lines of constant accuracy, the accuracy should be interpolated from the neighboured lines of constant accuracy.

The labels in the two inner areas show the accuracy within the entire area.

R denotes linearity within the labelled area or line. See details below.

For the analyzer types -L and -K, the upper frequency limit is 0.3 and 3 MHz, respectively.

How to use the impedance accuracy specification

Consider a measured impedance point Zm* represented by its absolute value |Zm*| and phase angle ϕm. The accuracy of Zm* can be defined by a percentage factor A with respect to |Zm*| and a phase deviation ϕ.

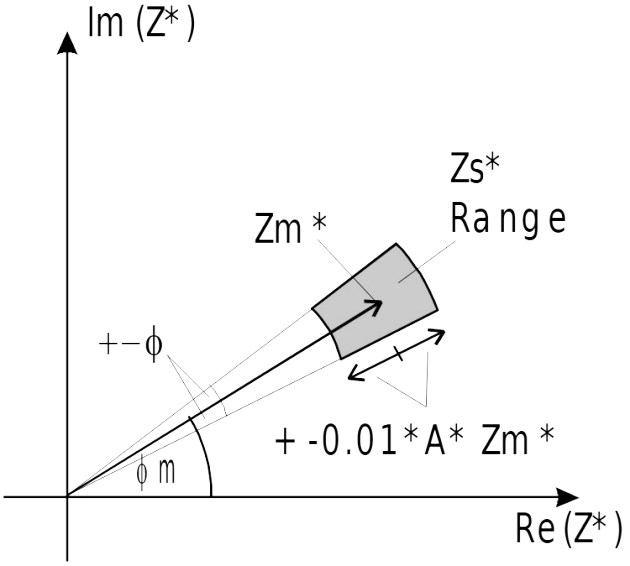

Fig. 2. Definition of accuracy area in dependence of amplitude and phase accuracy.

The true sample impedance Zs* is in the shaded area.

A and ϕ depend on the frequency and impedance range of Zm*. They are shown in the diagram on the previous page as lines of constant accuracy. Each line of constant accuracy is labelled by an accuracy specification. The different labels have following meaning:

Line Label	Accuracy Definition on Labelled Line
100% 180°	Limit of the available impedance range measured either by an open sample (top line) or a short sample (bottom line).
A% ϕ°	Specifies absolute accuracy A for |Zs*| in percentage of the measured value and absolute phase angle accuracy ϕ . $\|Zs^*(\omega)\| = (1 \pm A/100)\ \|Zm^*(\omega)\|$ $\phi s = \phi m \pm \phi$
RA% ϕ%	Like above, but RA species relative accuracy instead of absolute accuracy. E.g. Inside the area surrounded by the R0.01% line, impedance values will be linear to 0.01% to each other but may have 0.1% error in absolute value. Linearity applies both in frequency and impedance direction. ϕ specifies the absolute phase accuracy like above. E.g. ϕ=2m° corresponds to an absolute accuracy in loss factor tan(δ) of $3 \cdot 10^{-5}$.

Example:

Consider a measured data point Zm* with |Zm*| = $2 \cdot 10^{11}$ Ω at 1 Hz. It is located in the accuracy diagram between the constant accuracy line 0.1% 0.06° and 1% 0.6°. By logarithmic extrapolation between the lines one gets the accuracy of about

±0.33% of |Zm*| for the |Zs*| absolute accuracy

and

±0.22° for the absolute Zs* phase accuracy.

In addition to Zm*, the accuracy may be determined in the other representations measured capacity Cm*, measured inductance Lm* or measured admittance Ym*. These quantities are related to Zm* by

$$Cm^* = -\frac{j}{\omega Zm^*} \tag{1}$$

$$Lm^* = \frac{Zm^*}{j\,\omega} \tag{2}$$

$$Ym^* = \frac{1}{Zm^*} \tag{3}$$

with ω = 2 π frequency and j = imaginary unit.

As can be seen from the above equations, all conversion only affect the phase angle by constant shift of ±90° (Lm*, Cm*) or leave the phase angle unchanged (Ym*). Therefore the phase accuracy is the same for all four representations and the amplitude accuracy is only affected by the absolute value of each representation. The corresponding lines for |Cm*| (linear decreasing impedance with ω) and Lm* (linear increasing impedance with ω) are shown in the accuracy specification. The lines for |Ym*| correspond to the horizontal lines for |Zm*| if inverted. From these lines, the accuracy can be determined for all representations.

Example: Frequency and capacity range with loss factor tan(δ) absolute accuracy of $\pm 10^{-4}$.

tan(δ) = $\pm 10^{-4}$ ↔ δ = ±6 m°. As can be seen from the impedance specification this applies for capacities from 20 pF to 5 nF. For e. g. 100 pF the frequency range for δ ±6 m° is 0.2 Hz to 1 MHz. As this range is labelled with R0.01%, the relative accuracy with respect to each other of all |Cm*| values within this labelled area will be 10^{-4}, too. E. g. |Cm*| of an ideal capacitor would be measured flat to ±0.01% over the specified frequency range. The absolute accuracy of |Cm*| is 0.1% as the R0.01% area is inside the 0.1% area.

2.2. Accuracy of Gain-Phase Measurement

The absolute voltage amplitude ratio and phase accuracy of input channel 1 and 2 in gain-phase mode can be determined from the diagram below. For the Beta analyzer, channel 1 refers to the differential voltage V_{high} - V_{low} respectively.

The following limits of measurement refer to 1 V generator voltage, inputs dc coupled, auto range selection enabled, input voltages between 20 mV and 3.2 V.

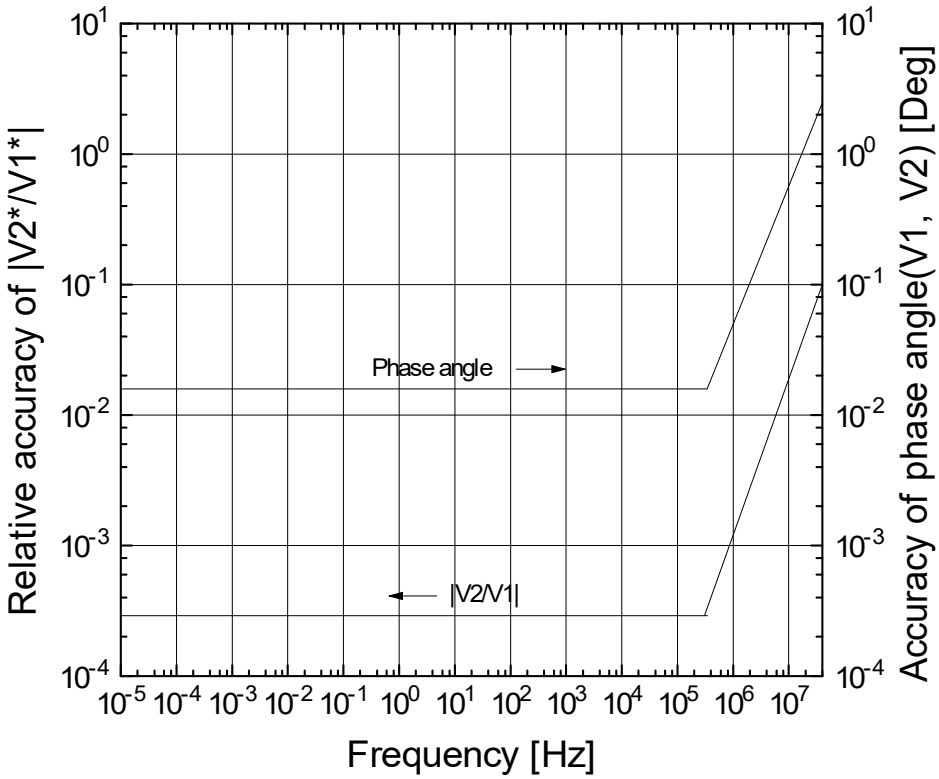

Fig. 3. Alpha analyzer accuracy for gain-phase measurements.

For the analyzer types –L, -K and –N, the upper frequency limit is 0.3, 3 and 20 MHz, respectively.

Amplitude ratio (|V1*/V2*|) and phase resolution (reproducibility):

10^{-5} of selected range, 10^{-3} degrees below 1 MHz

10^{-4} of selected range, 10^{-2} degrees from 1 MHz .. 10 MHz

10^{-3} of selected range, 10^{-1} degrees above 10 MHz

2.3. Test Sample Results

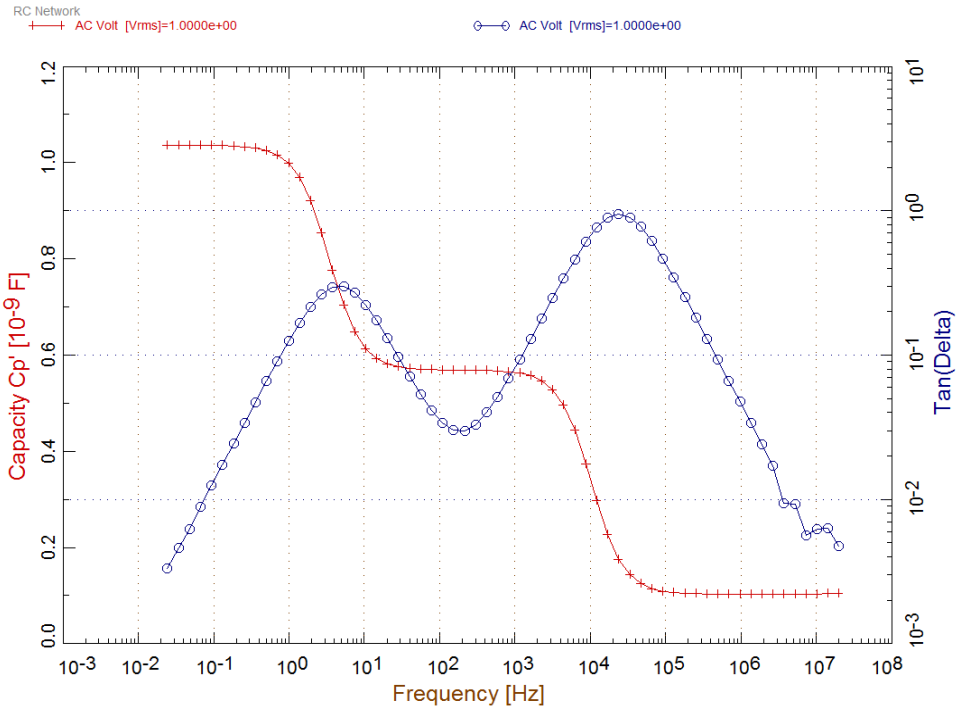

Fig. 4. Typical results of the RC test sample network.

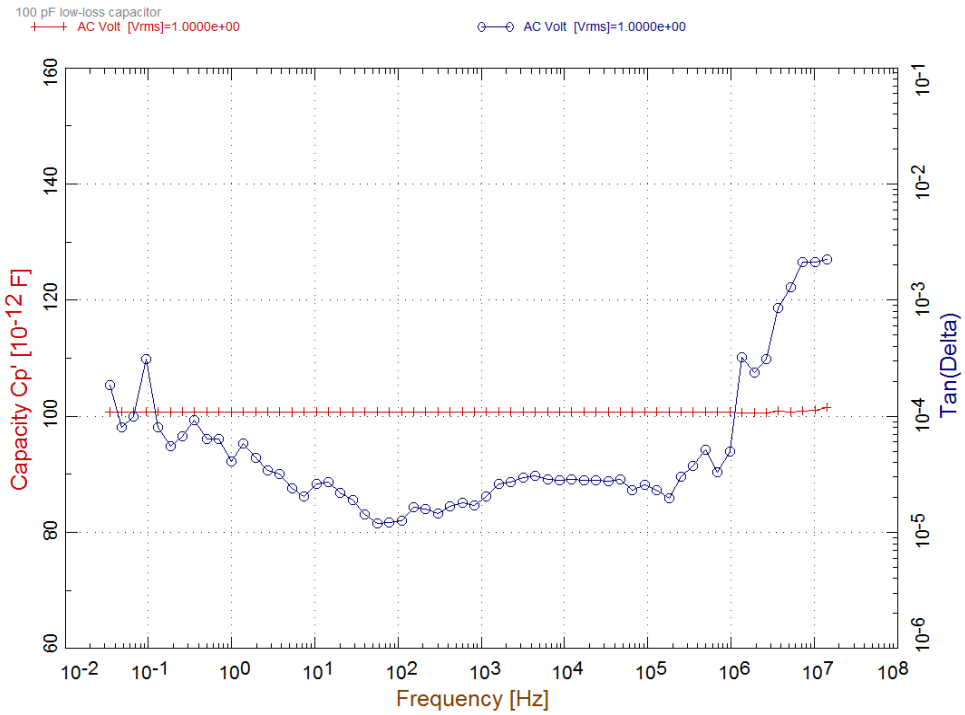

Fig. 5. Typical results of the low loss test sample.